FORMAT hansgrohe

DE Montageanleitung
FR Instructions de montage
EN Assembly instructions
NL Handleiding
DK Monteringsvejledning

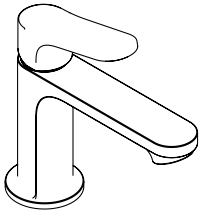

FORMAT Pro 80
72539000

FORMAT Design 80
72539670

FORMAT Pro 80 CoolStart
72534000 / 72535000

FORMAT Design 80 CoolStart
72534670

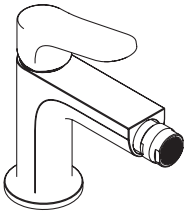

FORMAT Pro
72220000

FORMAT Design
72220670

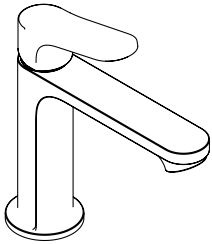

FORMAT Pro 110
72547000

FORMAT Design 110
72547670

FORMAT Pro 110 CoolStart
72546000 / 72548000

FORMAT Design 110 CoolStart
72546670

EN 1717 | EN 806 | DIN 1988

P	max. 1 MPa (10 bar)	0,1 - 0,5 MPa (1 - 5 bar)	☺
T	max. 60 °C	< 50 °C	☺
V	0,1 MPa (1 bar) ≈ 3 l/min 0,3 MPa (3 bar) ≈ 5 l/min		

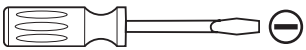

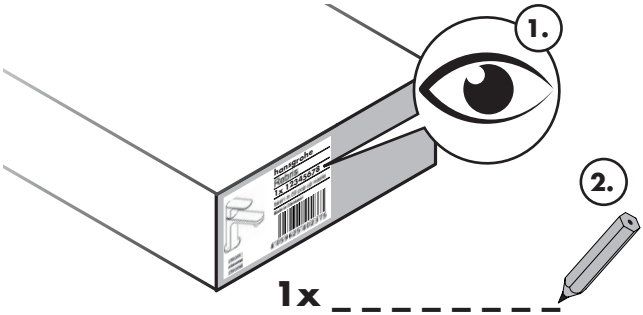

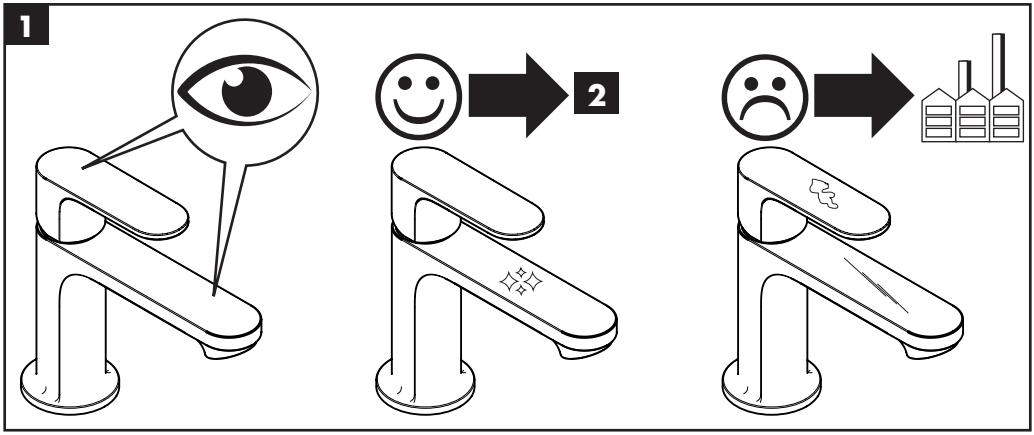

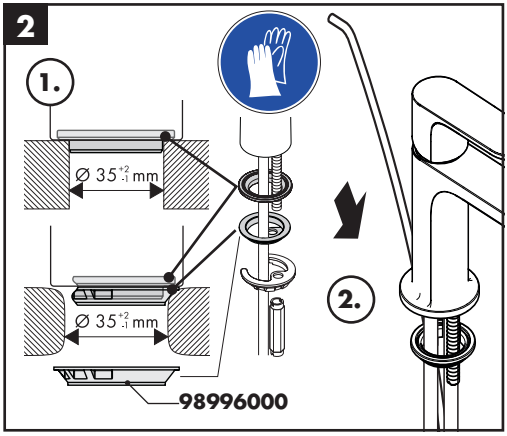
2
1.
Ø 35 +2 -1 mm
Ø 35 +2 -1 mm
2.
98996000

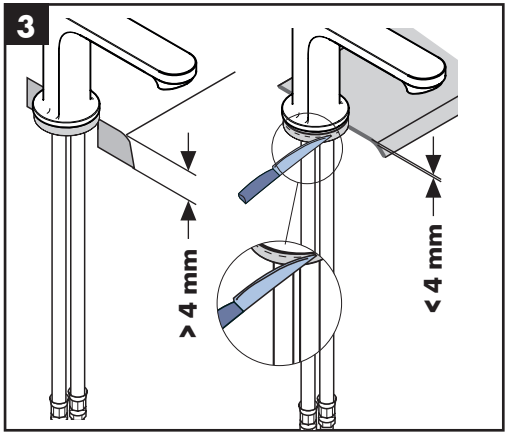
3
> 4 mm
< 4 mm

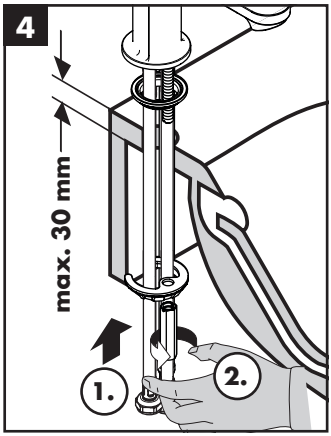
4
max. 30 mm
1.
2.

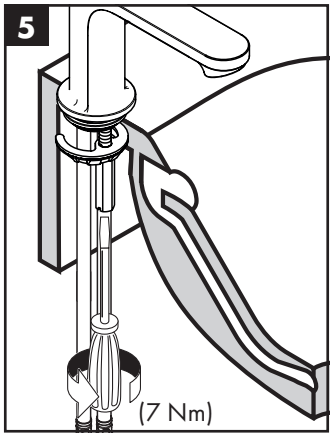
5
(7 Nm)

6

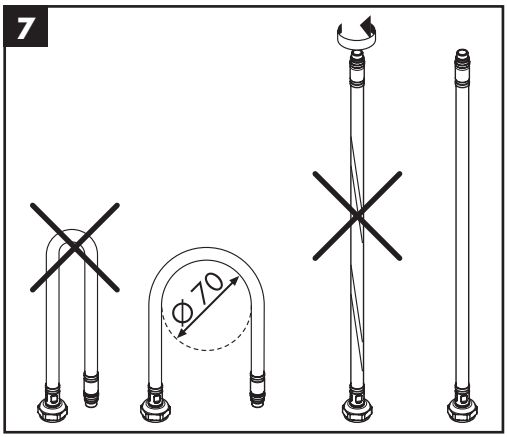
7
Ø 70

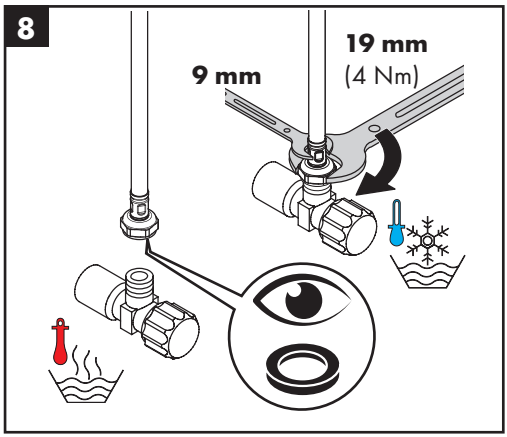
8
9 mm
19 mm
(4 Nm)

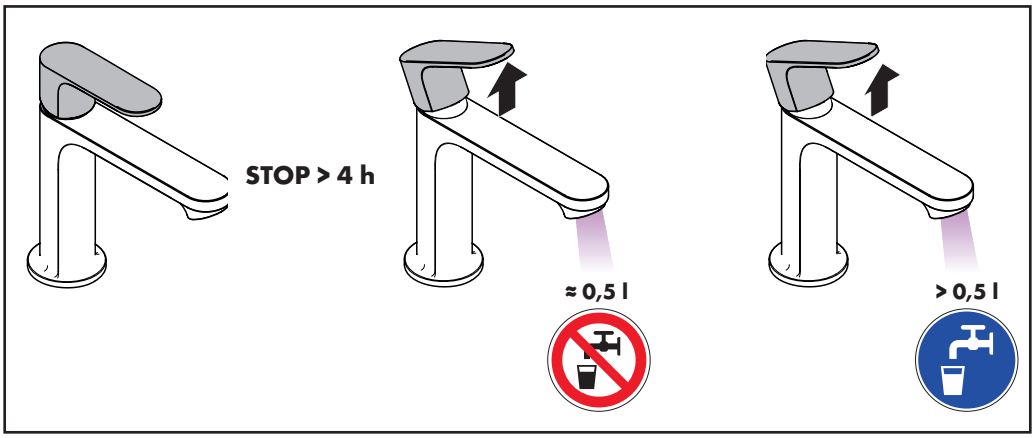

www.hansgrohe.com/search

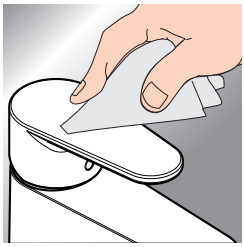

*www.hansgrohe.com/warranty

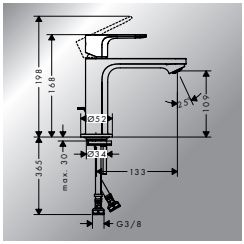

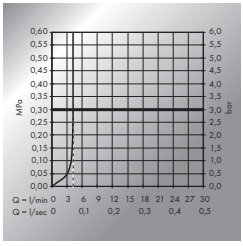

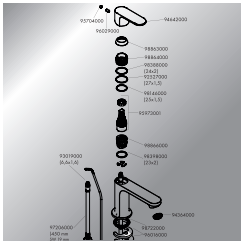

	DVGW	ETA
72539XXX	DN0342	
72534XXX	DN0342	
72535000	DN0342	
72220XXX	DN0342	
72547XXX	DN0342	
72546XXX	DN0342	
72548000	DN0342	

hansgrohe
Hansgrohe · Auestraße 5 - 9 · D-77761 Schiltach · Telefon +49 (0) 78 36/51-1282 · Telefax +49 (0) 7836/511440
E-Mail: info@hansgrohe.com · Internet: www.hansgrohe.com

05/2024
9.01039.03